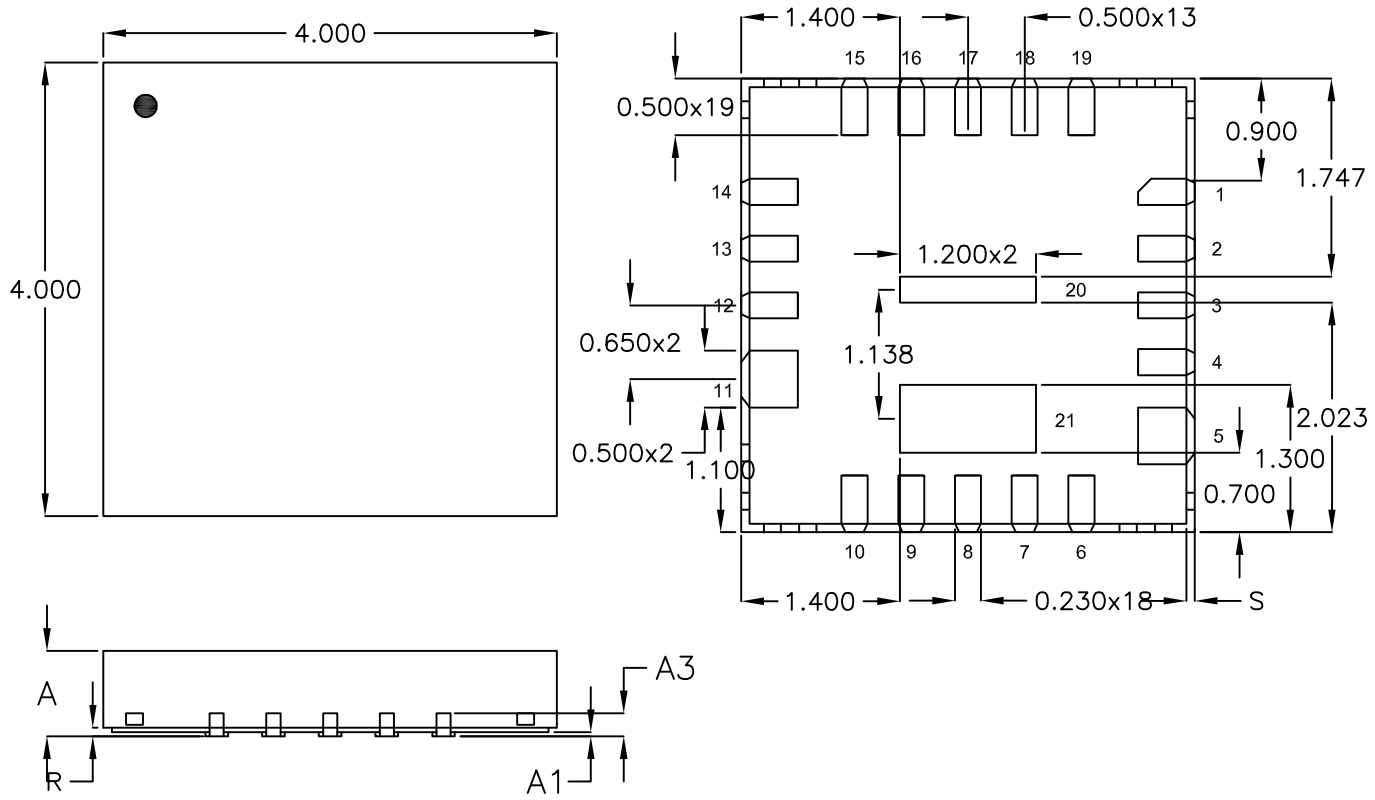

Symbol	Dimensions In Millimeters		Dimensions In Inches	
	Min	Max	Min	Max
A	0.700	0.800	0.028	0.031
A1	0.000	0.050	0.000	0.002
A3	0.175	0.250	0.007	0.010
R	0.050	0.150	0.002	0.006
S	0.001	0.090	0.000	0.004

Tolerance
±0.050

RICHTEK
立錡科技股份有限公司

SCALE: 15:1

DWG TITLE: PACKAGE OUTLINE DRAWING

WET-WQFN4x4-21(FC)